REVISIONS			
REV	DESCRIPTION	DATE	APPROVED
A	INITIAL RELEASE	05-13-97	JWM

NOTES:

1. MATERIALS AND FINISH:
   INSULATOR – GLASS FILLED POLYESTER, 94V-0 RATED.
   CONTACT MATERIAL– BERYLLIUM COPPER
   CONTACT PLATING– .000100 MATTE FINISH 60/40 SnPb OVER .000050 Ni

2. ELECTRICAL CHARACTERISTICS:
   INSULATION RESISTANCE– 5000 MEGOHMS

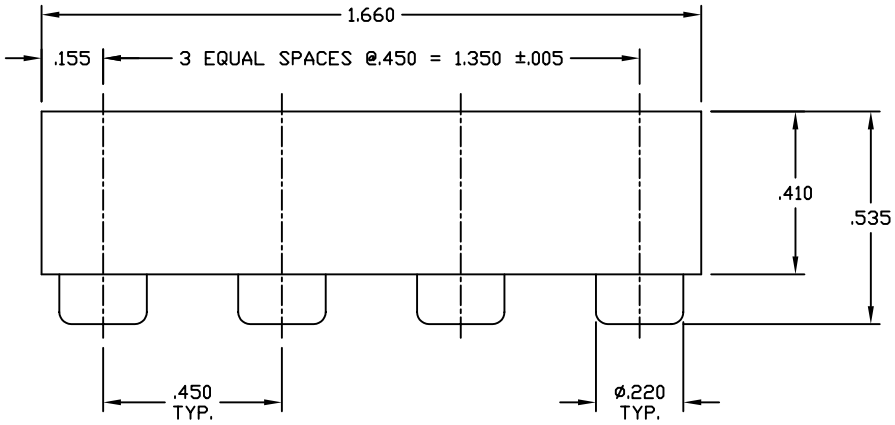

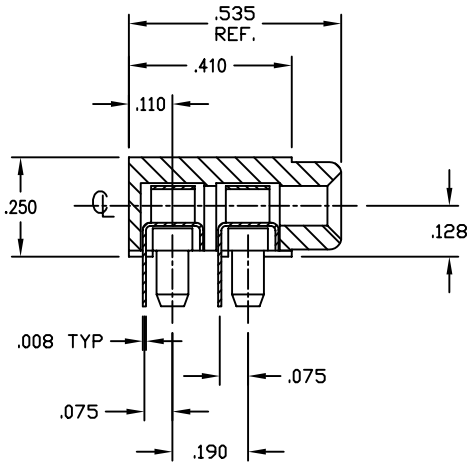

SECTION A–A

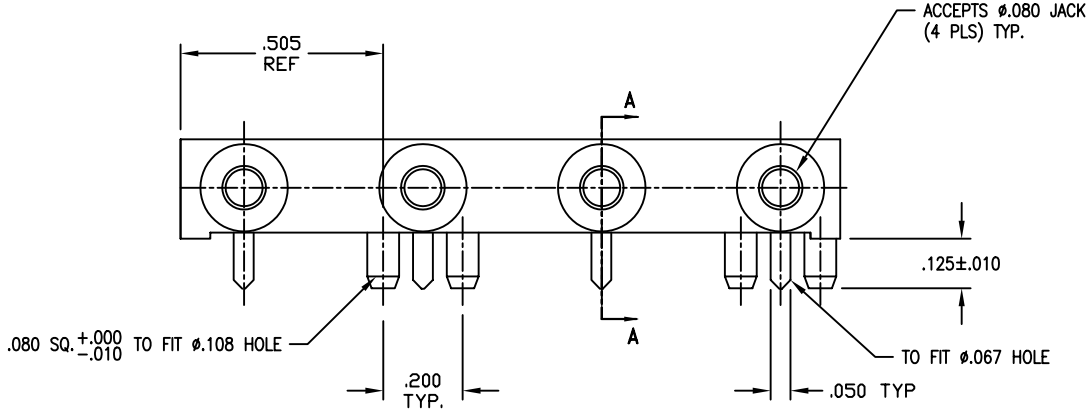

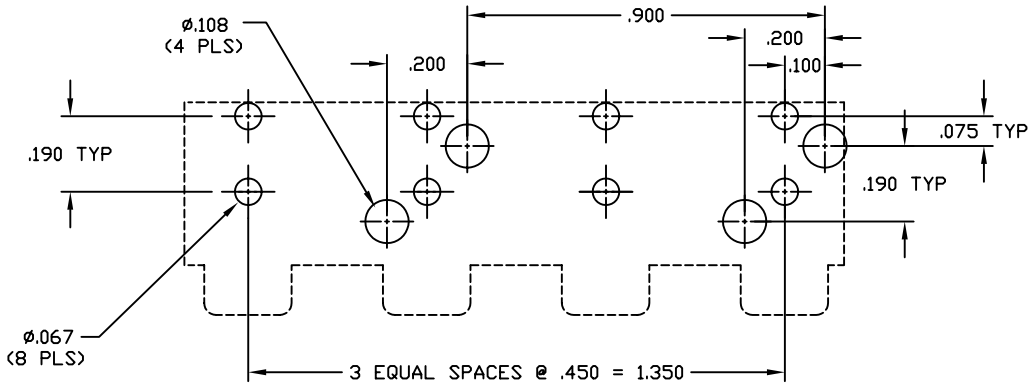

RECOMMENDED PCB LAYOUT

APPROVED		
	NAME	DATE
DRAWN	FGP	05–97
CHECKED	JWM	05–97
QUALITY	WBK	05–97
APPROVED	JWM	05–97

THE INFORMATION, DATA AND/OR SPECIFICATIONS CONTAINED ON THIS DOCUMENT ARE PROPRIETARY TO A.W. INDUSTRIES AND MAY NOT BE COPIED, DUPLICATED OR DISCLOSED IN PART OR WHOLE WITHOUT AUTHORIZATION IN WRITING FROM A.W. INDUSTRIES.

ALL DIMENSIONS ARE IN INCHES.

TOLERANCES:

DECIMAL .XX ±.015
.XXX ±.005

ANGLE ±1/2°

TITLE .080 TEST JACK
QUAD LAYOUT R

A.W. Industries, incorporated
6788 N.W. 17th AVENUE
Fort Lauderdale,Fl 33309

SIZE	DWG. NO.	
C	8804R–1	
SCALE NONE	ACAD FILE NO. 03–0513–0A	SHEET 1 OF 1